RS Procedure 2017_043

May 16th

2017

[FRS a-150B Toggle bush exchange instruction : The wear of the toggle bush The failure may occur by running the machine for a long time. Please exchange the bush according to this attached instruction sheet (A-80581E/01) when the toggle bush is worn out. This document is a general procedures manual to exchange the toggle bush (This is applicable for ROBOSHOT Alpha -150B series model machines- A07B-1802-B001)**]**

[**FRS a-150B Toggle bush exchange instruction**]

Note: Parts specification.

"A290-5234-X111#708582, A290-5234-X112#708547, A290-5234-X113#405047"

General Cautions

a. Safety first.

b. Special care is need for handling any parts.

c. Mark on the any parts for assembling in the original position and direction when disassembling.

Required tools

General working tools and Parts.

No	Name	Specification	Qty.	Remarks
1.	Bush	A290-5234-X111 #708582	12	for Binary link
2	Bush	A290-5234-X112#708547	2	for Crosshead link
3	Bush	A290-5234-X113#405047	2	for Crosshead link
4	Link pin (L)	A290-5234-X022	2	-
5	Link pin (S)	A290-5234-X023	8	-
6	Crosshead pin	A290-5234-X024	2	-
7	Spring pin	A6-PS-6X20S	4	for Gear
Dry ice	-	-	for cooling bush	

Working Procedure

2. Outline

(1) Pull out 4 tie bars by clamp force.

(2) Pull out the central toggle pin.

(3) Exchange the bush and the pin of the binary link (L) on the movable platen side.

Unload the rear platen from the machine ,and exchange the bush and the pin of the binary link (S) and the cross head link

3.Procedure

(1)Fasten the mold.

(2) Detach all of the 4 tie bar nuts.

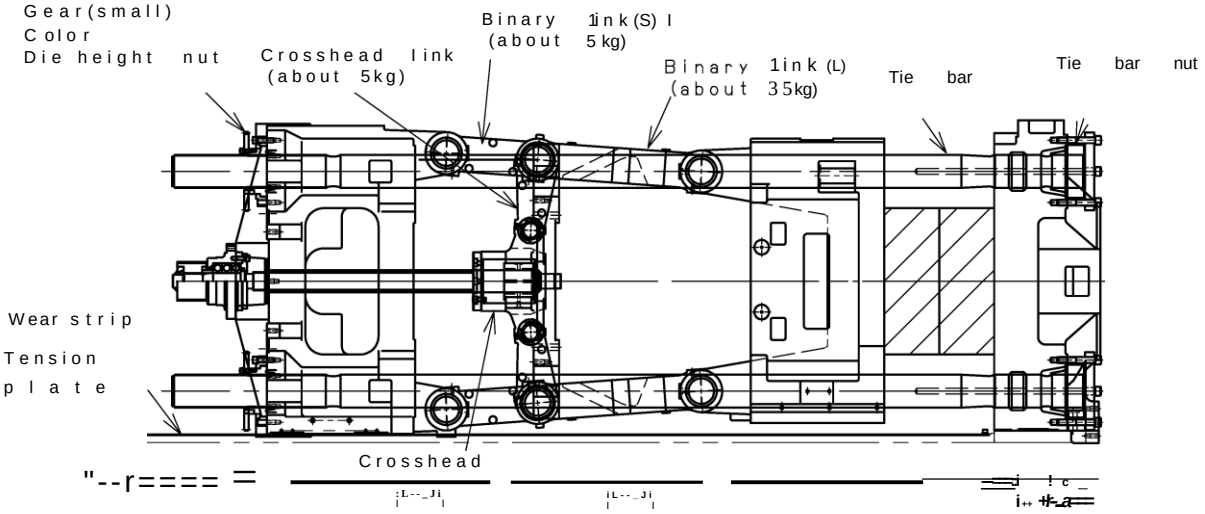

(3)AdJust die height position so that the mold touch Point for generating the clamp force of 150 ton is obtained, and carry out lockup process.
Check that the tie bars come off slightly.

(4)Repeat the above procedure (3) until the fit of the tie bar come off half (about 60mm).

(5) Remove rust of the seizure of the tie bar with abrasive cloth etc. (example: Scoth-brite(#320)).

(6)Put the mold in mold touch state to close it, and Join the mold to the stationary platen.
Unload the mold once if the mold can't be Joined.

(7) Retract die height to this side of the retract limit position. Open clamp so that the crosshead position indicates about 287mm, and collapse the toggle.

(8)Pull out the central toggle pins (upper and lower 2 places) which Join the binary link (S and L) and the crosshead links with the Jig. (Remove the set Screw beforehand.)
(Refer to 4.Direction of pulling out pin)

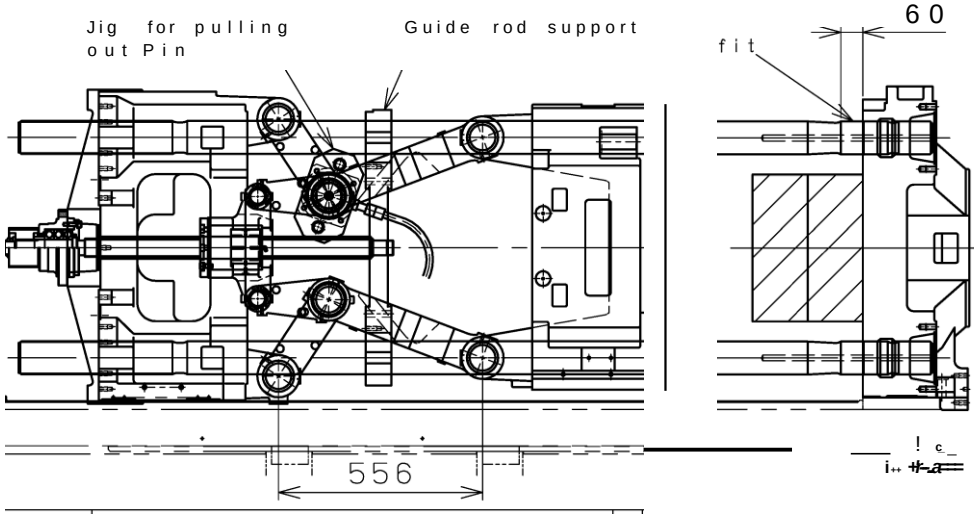

(9) After pulling out the central toggle pins, the Jig (pin type) Joins each link instead of the toggle pin. Note that the link become cantilever and falls when the Jig is pulled out.
Put a rectangular lumber etc. between the guide rods on the operation and Non-operation side and between the tie bars so that the link cannot move as shown in the below figure, then pull out the J 19.
Hanging the link (L) with the crane is safer, because it es Pecially has weight.

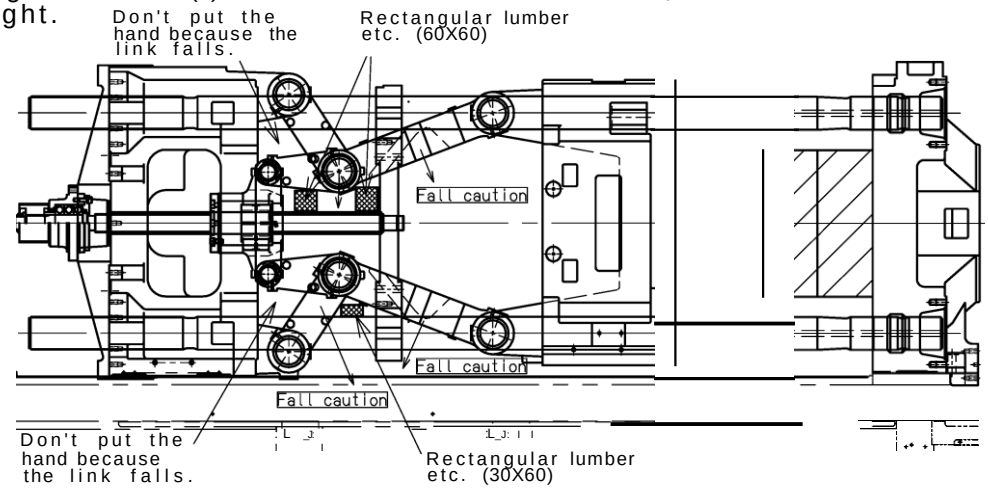

(10) Pull out the rectangular lumber slowly, lifting each link. f
Unload each link as shown in the below igure. (Neither the tie rod nor the oversize rod support are shown in the figure.)

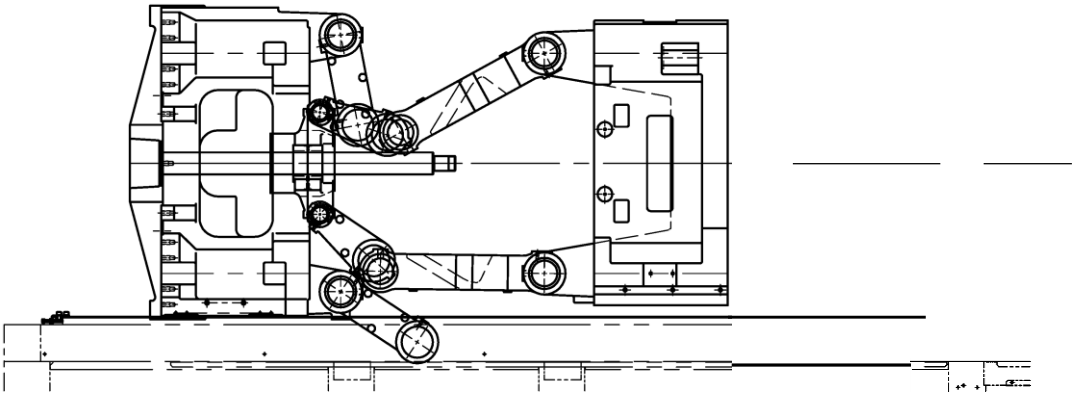

(11) Retract slowly die height, hanging the lower binary link (L) with the crane. At this time, remove the retract limit switch of die height and the tension plate of the wear strip.
Advance to Procedure (16) if the tie bar rotates and the rear Plate n doesn't retract. Refer to (1).

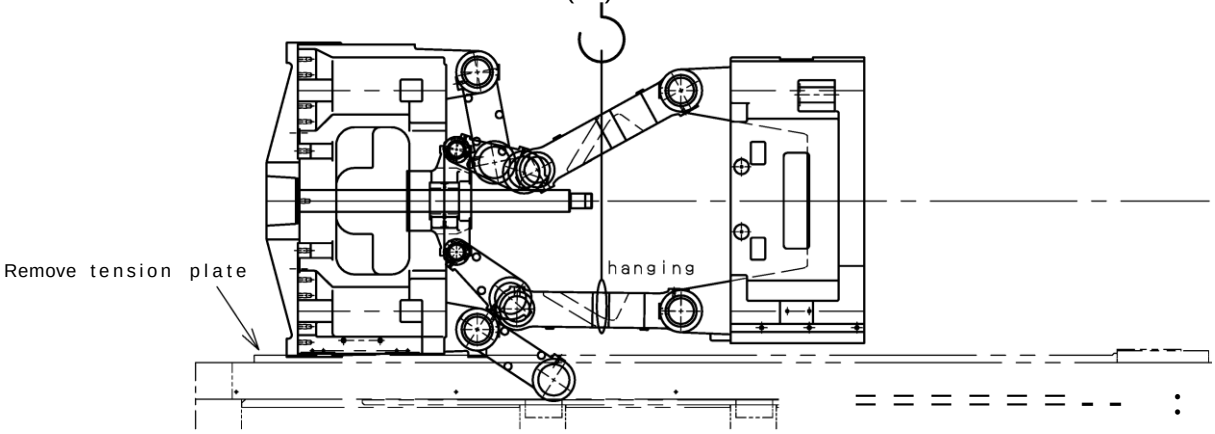

(12) Note that the lower binary link (L) falls from the rear platen when die height retracts a little.
Stop die height once at the position where the link can be unloaded from the rear platen.
Put a rectangular lumber etc. on the base, then put the lower binary link (L) on the rectangular lumber.

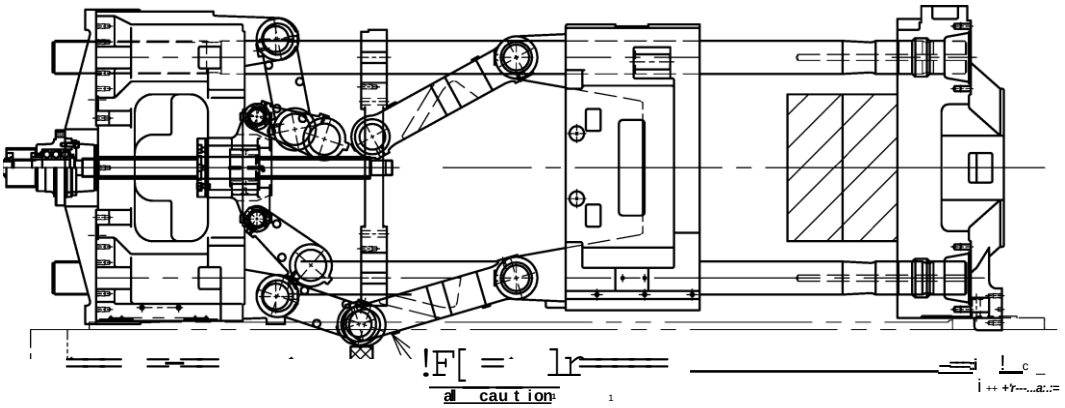

(13) Hang the upper binary link(L) with the crane, lift it onthemovable platen, and fasten it with sling etc.

(14) Turn the Y axis pulley by the hand, retract the crosshead, and bind upper and lower binarY link(S) with sling etc. as shown in the below figure.

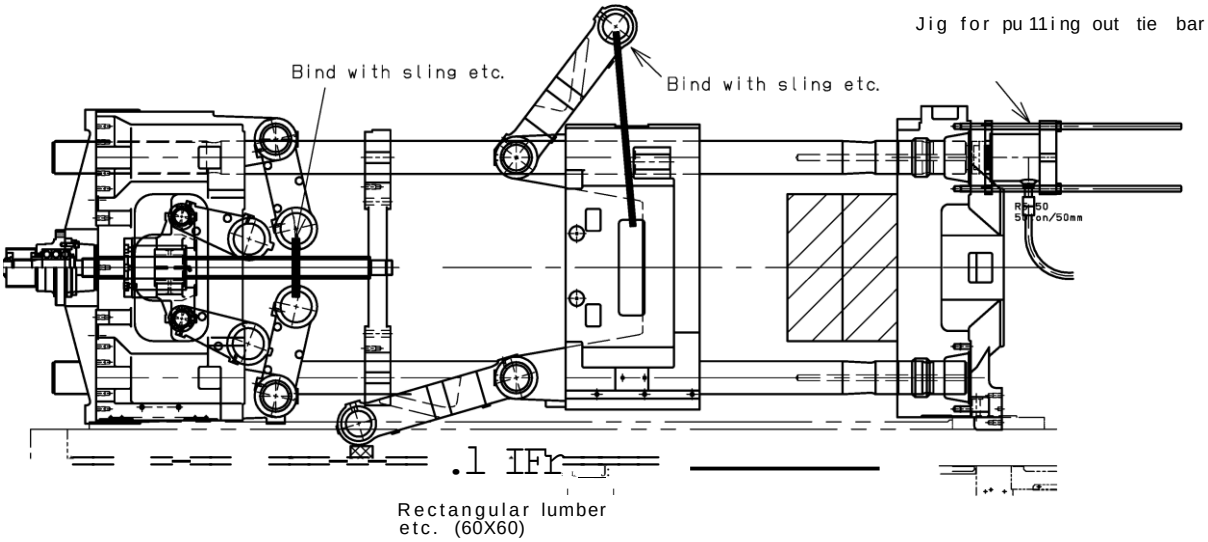

(15) Retract die height to this side of the place where the rear platen doesn't fall from the wear strip,

(16) Remove the gear(small), the color and the die height nut from the rear platen.

(17) Down the power supply and the breaker, and remove the cable of Y axis and B axis motor from the rear platen completely.

(18) Pull out two tie bars on the diagonal with the Jig.
(Refer to 5. Directions of Jig for pulling out tie bar.)
Remove rust of the seizure of the tie bar pulled out and the fit of the stationary platen cleanly.

(19) If the rear platen cannot be moved, retract the rear platen slowly, hanging it with the crane, then carry out the procedure(12)-(15).

(20) Pull out the upper tie bar, and remove rust of the fit of the tie bar and the stationary platen.

·Note that the guide rod support might fall when the tie bar is pulled out.

(21) Hang the upper binary link (L) on the movable Platen side with the crane, and hold it horizontal.
Remove the setscrew, and pull out the toggle pin with the Jig.
Remove the Jig, and remove the binary link (L) from the movable platen.
(Refer to 4. Direction of pulling out pin)

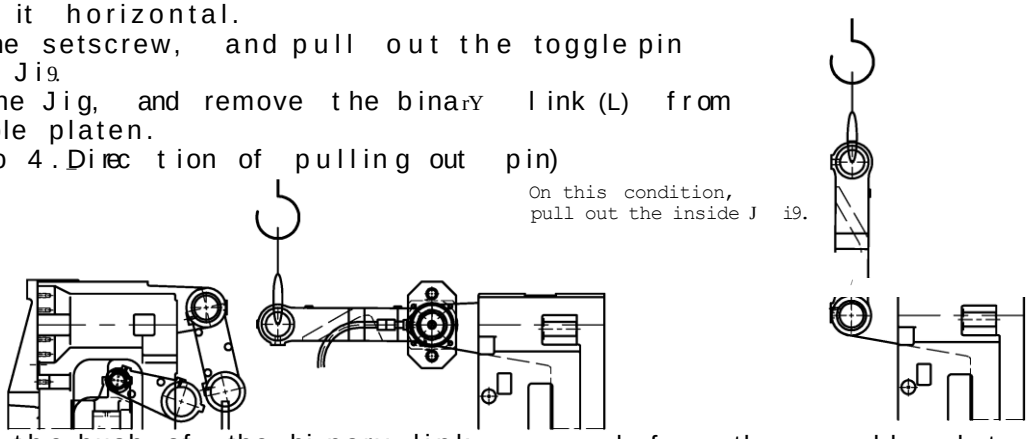

(22) Pull out the bush of the binary link removed from the movable platen with the Jig.
Assemble the new bush which has been cooling enough with the dry ice beforehand, cleaning the hole of the link.
(Cooling for one hour or more; target temp. : -70"C)
At this time, assemble the bush so that the greasing hole of the link corresponds to one of the greasing holes of the bush. Push out the bush to Just 1mm from the link with the Jig. (Refer to 6.Bush replacement)

(23) Assemble the binary link to the upper part of the movable platen.
At this time, apply the grease (RUBER) to the bush and anti-seize lubricant (Omega 99) to the movable platen.

(24) Insert the Pin, and fix the setscrew.
(Refer to 7.Notes of fastening setscrew)

NOTE: Degrease the following parts; the setscrew, the tapped hole and the taper hole of the pin. Drop LOCTITE242(Medium strength) to the interior of the tapped hole and to the whole area of the setscrew.

(25) Insert the tie bar in the diagonal position of the remaining tie bar again.
At this time, apply grease to the mating part of the stationary platen, and push the tie bar into the injection unit side (until the mating part comes out to the inJection side) as much as possible.

(26) Pull out the lower tie bar, exchange the bush of the lower binary link (L) by procedure similar to (21)-(25), then insert the tie bar cleaned again.

NOTE: Where link interfere to the guide rod and doesn't remove the link, retract the rear platen further.
In that case, remove the tension plate of the wear strip, and retract the rear Platen further.

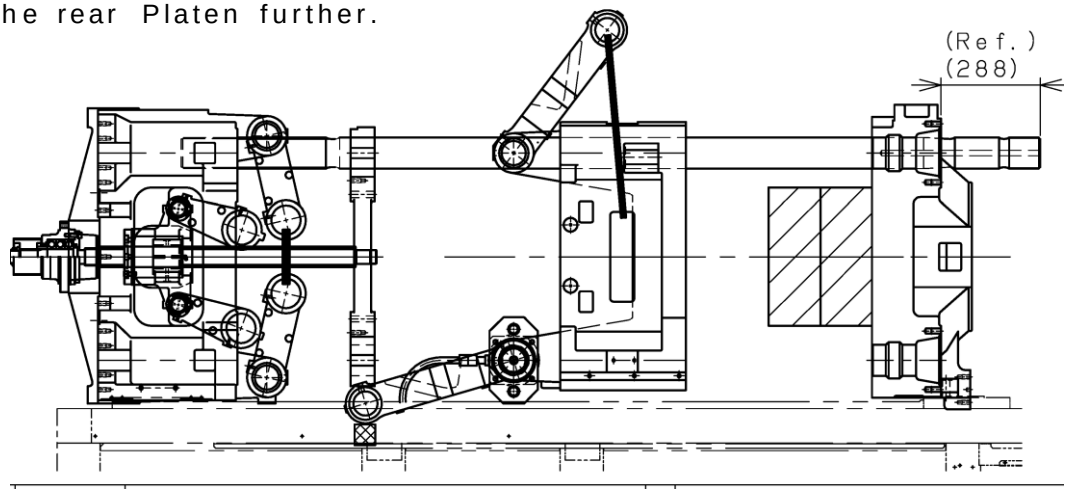

(27) Remove the guide rod support.

(28) Hang the rear Platen with the crane, and pull it out from the tie bars, moving it to the rear side slowly,
Unload the rear platen from the machine, after it is pulled out from the tie bar.
If a forklift can be used, the rear Platen can be moved more easily by the slow pull of a rear platen by the forklift, hanging a rear Platen with the crane.
Note especially that because the rear Platen is a heavy part (about 800kg).

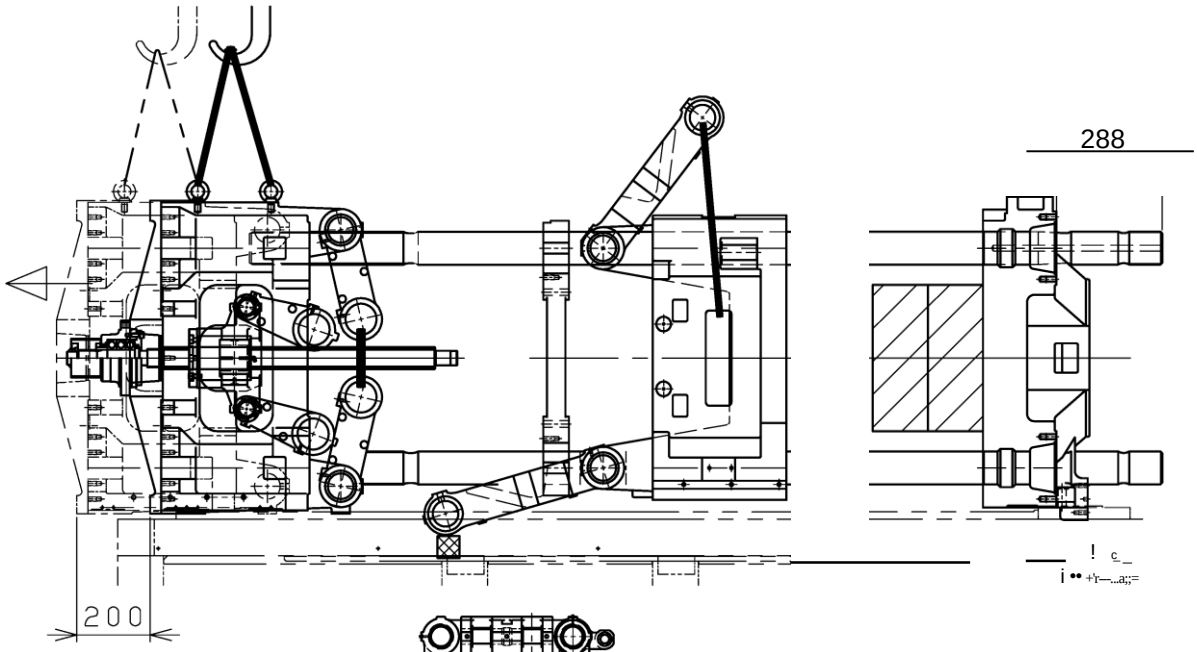

Incline outside the guide rod support into which the lower tie bar has been inserted. \

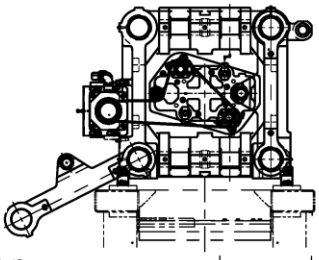

(29) Put the rear platen on a rectangular lumber etc. in order to use the Jig for the lower binary link (S) when the platen is put on the floor as shown in the below figure.
Hang the sling to the crane while working so that the rear platen should not fall.

(30) Unpick the sling that binds the binary link (S), and unload the lower binary link (S) slowly.

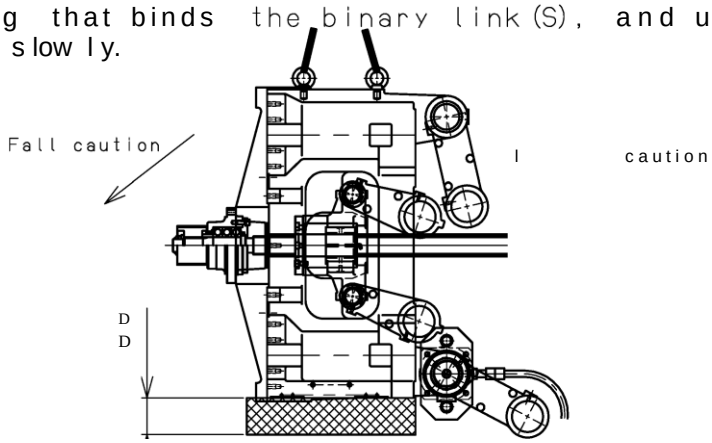

(31) Pull out the toggle pin and the crosshead pin from the rear platen, and remove them.

(32) Remove the bush from the binary link (S) and the crosshead link with the Jig.

(33) Clean up the hole that insert the pin and the bush.

(34) Insert the new bush which has been cooling it enough with the dry ice beforehand. (Cooling for one hour or more; target temP.: -70°C)

NOTE: Where the hole of the cast has been greatly worn out (where the clearance is 0.1mm or more), insert the pin of the larger diameter cooled with the dry ice.
In this case, apply the bush of a larger internal diameter to the part that inserted the thick pin.

(35) Assemble each link to the rear Platen and the crosshead. Apply grease to the bush and anti-seize lubricant (Omega 99) to the rear platen and the crosshead.
Fix the setscrew after inserting the pin.

(36) Bind upper and lower binary link(S) with sling etc.

(37) Hang the rear platen with the crane, and insert it into the diagonal tie bars carefully.

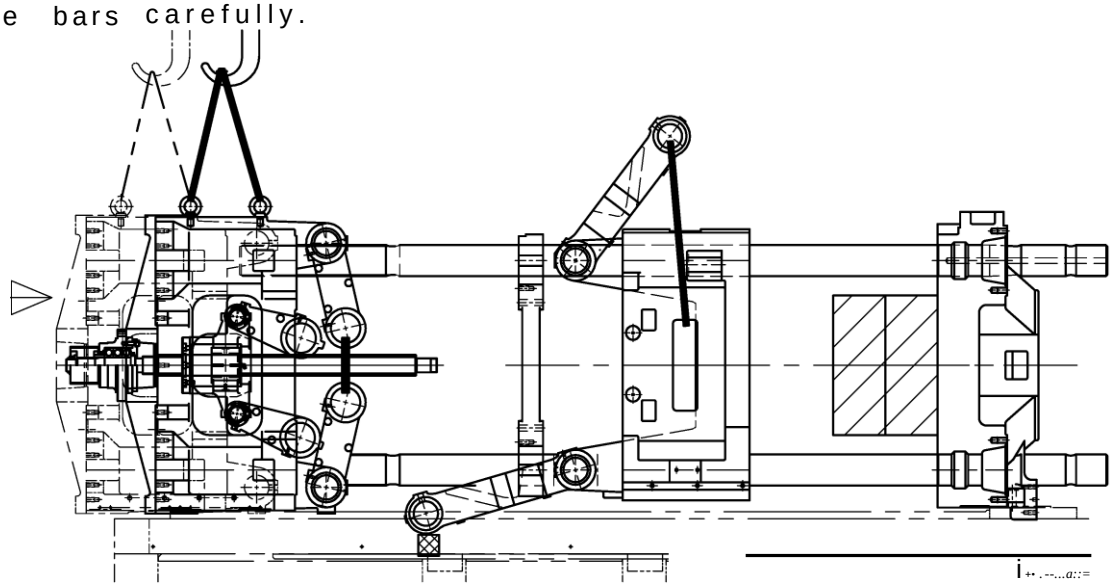

(38) Assemble the tension plate with the rear platen slightly floated from the base.

(39) AdJust the hole position of the lower binary link(S andL) and the crosshead link, and insert the toggle pin.

(40) AdJust the hole position of the upper binary link (S and L) and the crosshead link, and insert the toggle pin.

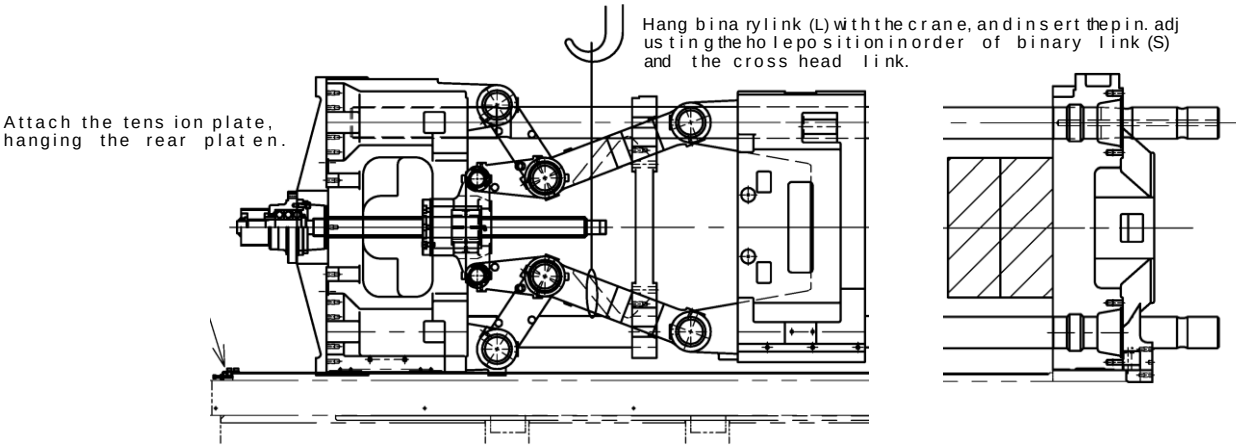

(41) Insert the remaining two tie bars.

(42) Put back the tie bars which were pushed into the inJection unit side, and assemble the tie bar nut.
APPlY anti-seize lubricant (Omega 99) to the fit portion of the tie bar and the threaded portion of the tie bar nut.

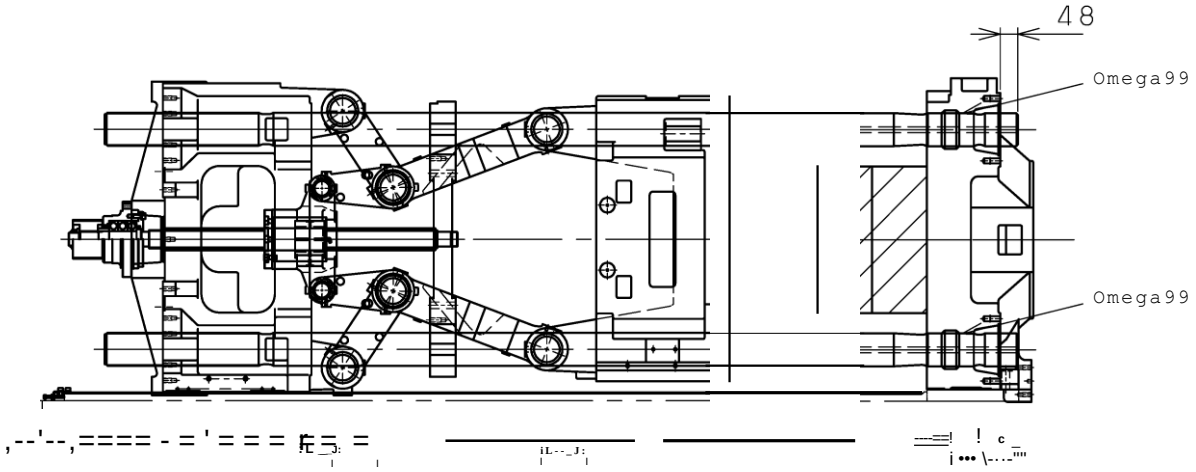

(43) Assemble the die height nut, the color, and the gear (small).
At this ti me, apply grease (RUBER) to threaded portion of the nut and to the inside of the color.

(44) Wire the cable of Y axis and B axis motor.

(45) AdJust the origin of Y axis.

(46) AdJust the clamp force balance and the parallelism of the platen.

4. Direct ions of Jig for pulling out pin

(1) Place the hydraulic cylinder between PLATE1-2 and 1-3, and fasten them with four M10x200 bolts.
(2) Set PLATE1-1 and PLATE1-2 which attached the hydraulic cylinder to on both sides of the toggle pin, and fasten them with the M30 screw. Bump PLATE1-1 to the machined surface of the link. If not bumped it, place RING between the machined surface and PLATE.
(3) Fasten the nut to both ends of the M30 screw.
(4) Place PIN between the toggle pin and the cylinder if necessary, and tighten the nut on the PLATE1-2 side.
(5) Pull out the toggle pin as shown in the below figure. Exchange and add PIN if necessary.

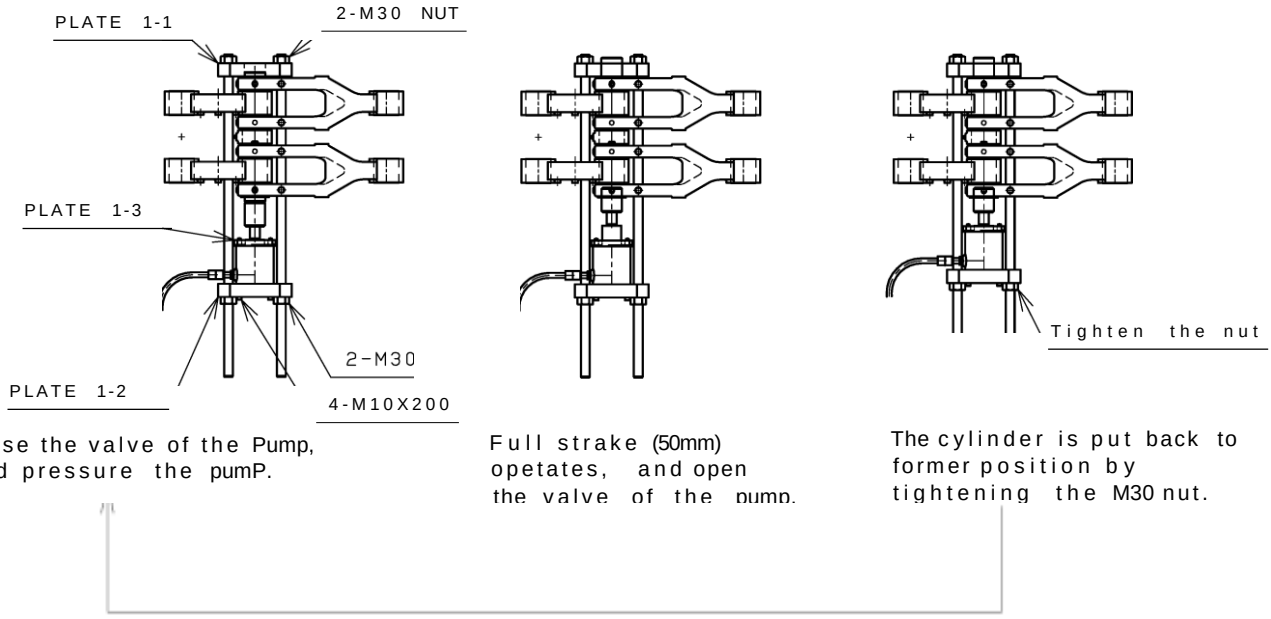

Draft of JIG

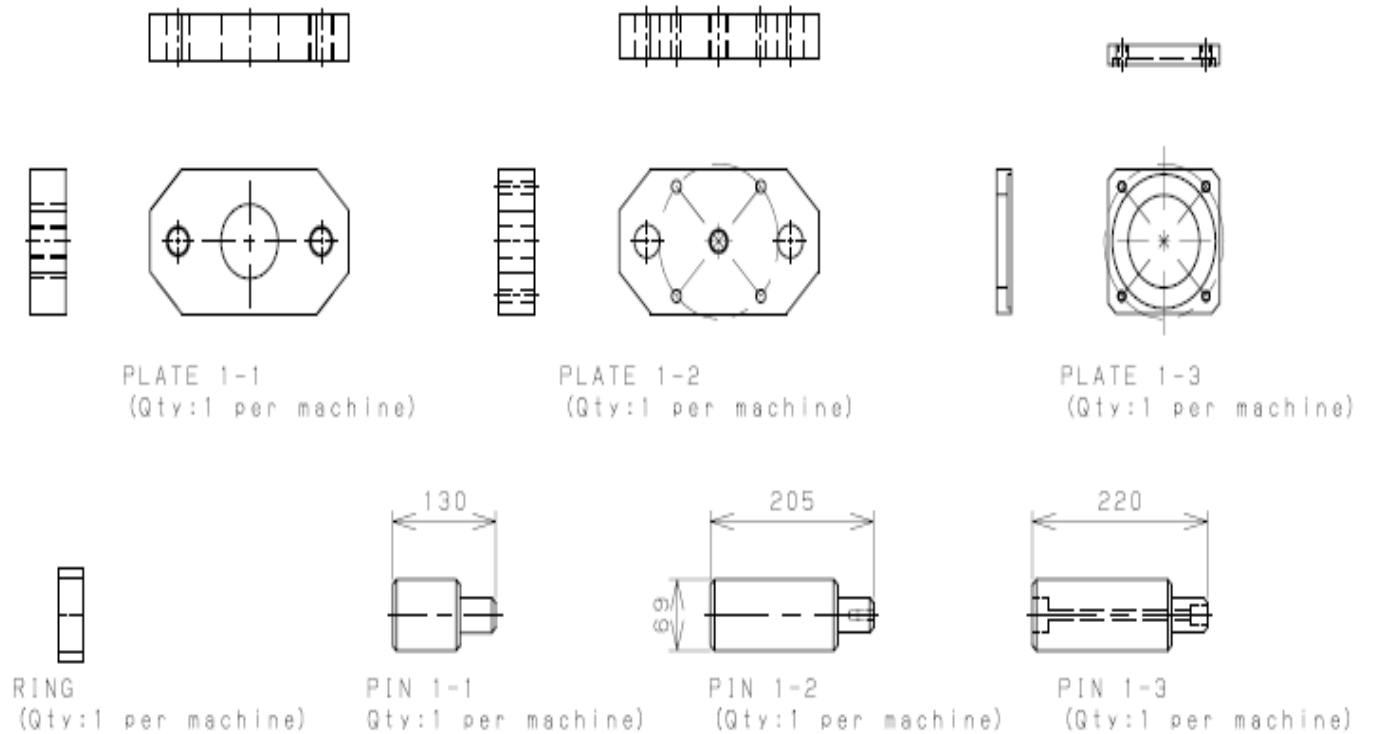

5. Directions of JIG for pulling out tie bar

(1) Place the hydraulic cylinder with PLATE2-1 and 2-2, and fasten them with four M20X100 bolts as shown in the below figure.
Fix the M16 long screws to the stationary platen, then fasten the nut behind PLATE2-1.

(2) Pull out the tie bar as well as pulling out the pin.
Place PIN between the strain rod and the cylinder if necessary,

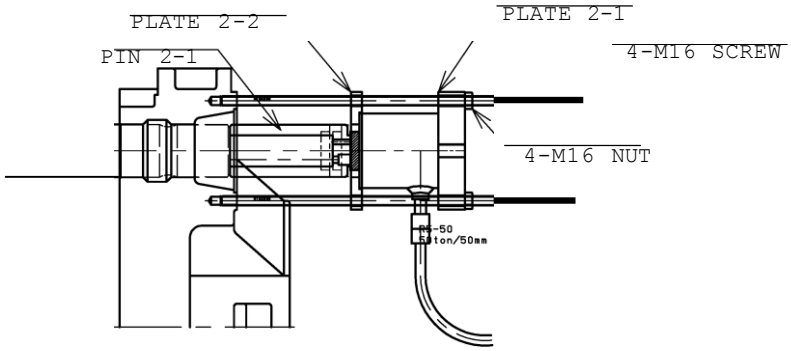

(1)' Fix the M24 long screws to PLATE2-1, and attach TIP on the point of the long screw.

(2)' So as not to damage the tie bar, place PLATE between TIP and the tie bar.

(3)' Attach two M24 nuts to the edge of the screw.

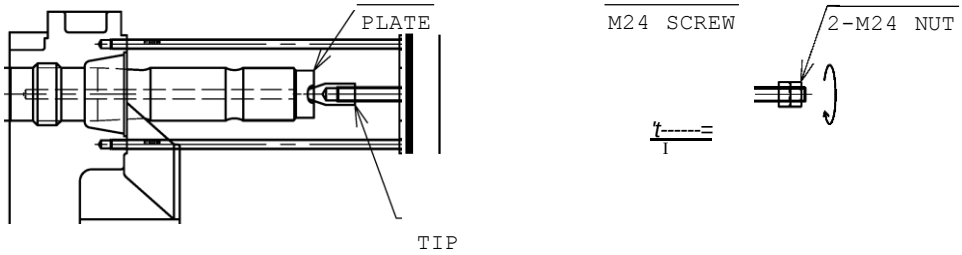

Draft of JIG

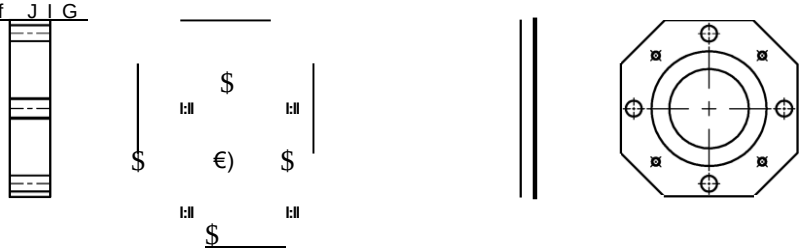

PLATE 2-1
(Qty: 1 Per machine)

PLATE 2-2
(Qty: 1 per machine)

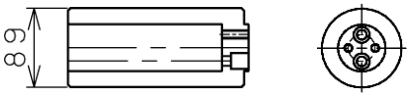

PIN 2-1
(Qty: 2 per machine)

TIP
(Qty: 1 per machine)

8 @

PLATE
(Qty: 1 per machine)

6. Bush replacement

(1) Set JIG1 and pulley puller.

(2) Fasten screw of pulley puller by wrentch, push out bush.

(3) Clean up hole of link and insert cooled bush. Fit lubrica ion hole of link and hole of bush. Push out bush Just 1mm from link by JIG2.

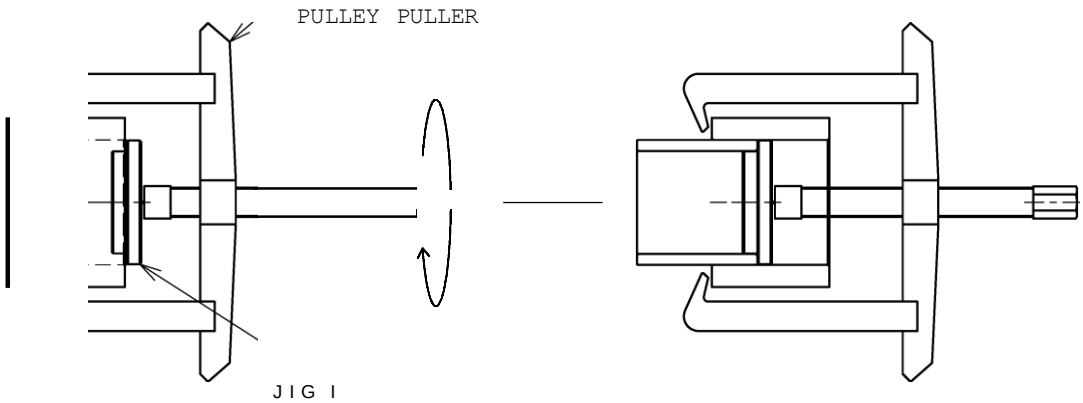

JIG I

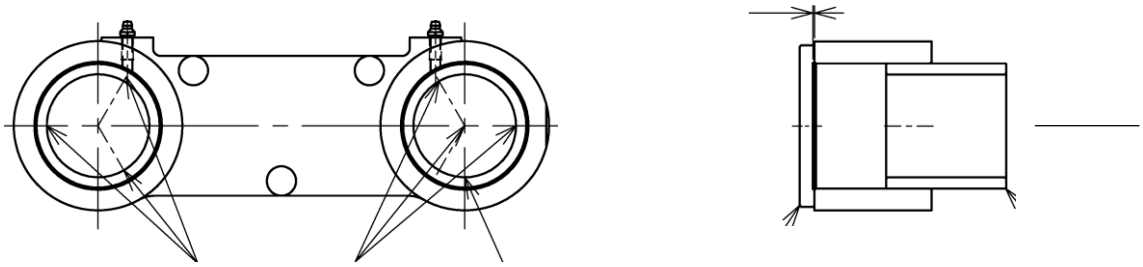

fit lubrication holes of links and holes of bushes.

JIG 2

BUSH

coat grease

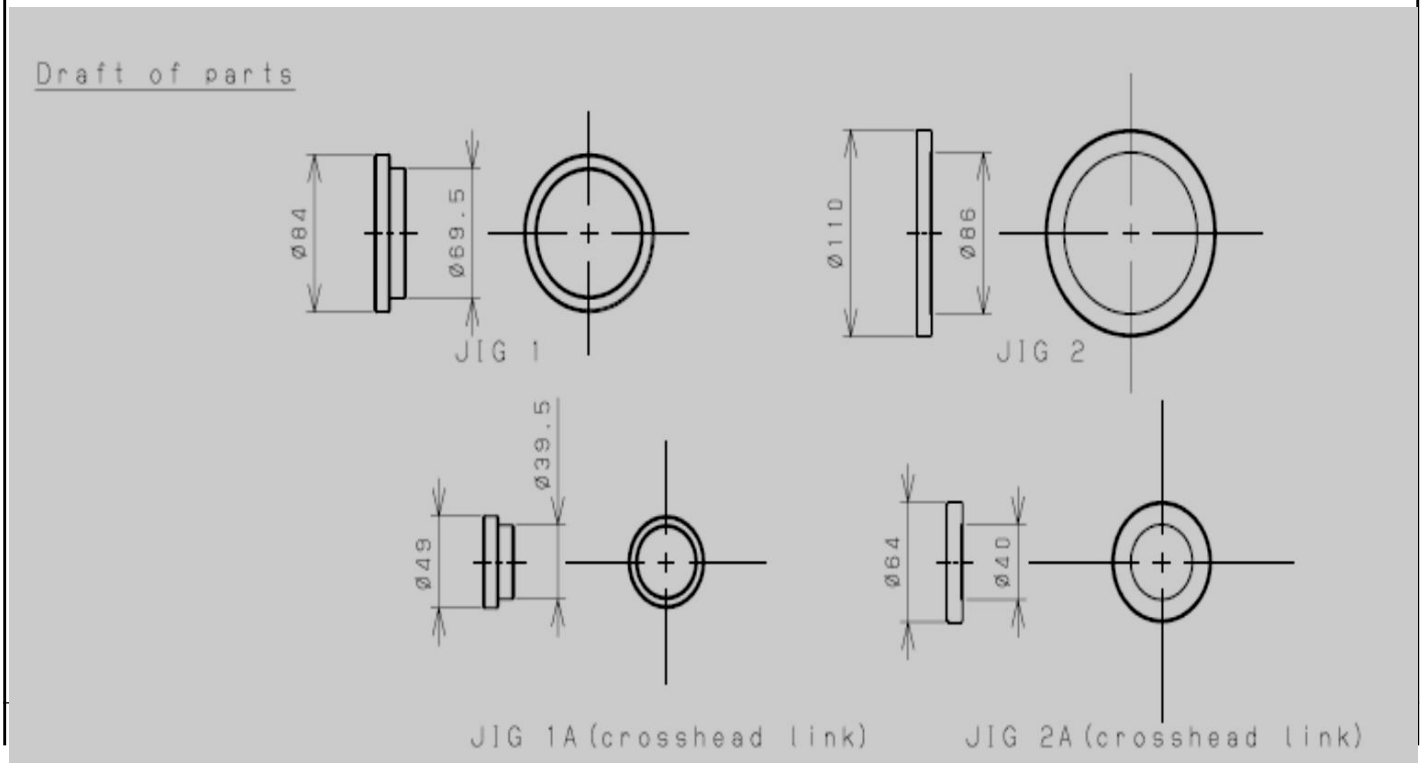

7. Notes of fastening setscrew

Secscrew fastening toggle pin might be loosen.
when the coating range of LT242to setscrew is narrow
or removing oil from setscrew is not sufficient.

Procedure

With cleaner, melt grease in the tapped hole and the taper hole. Remove grease and LT242 with cotton swab.
Remove oil from setscrew with cleaner.
Drop LT242 to the interior of the tapped hole and to the whole area of setscrew. Fastening setscrew.

*The cleaner is the general commercial mold cleaner.
*LT242 is medium strength thread locking of LOCTITE.

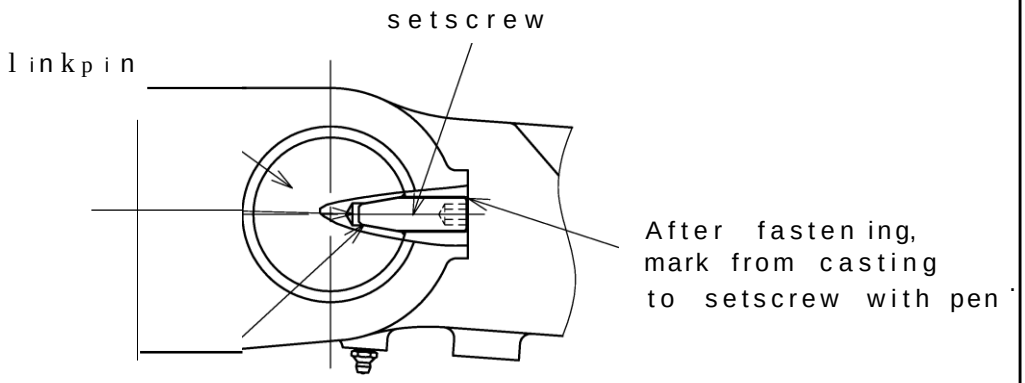
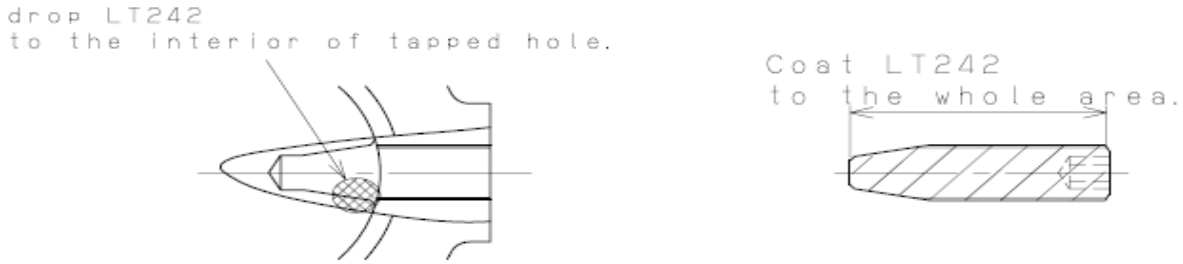
As the taper hole is sealed up,
when setscrew is fastened, air flows out with LT242.
Therefore, drop LT242 also to the interior of the hole.